Name: NGO TUNG CHUONG

ID: s225586848

GitHud: https://github.com/NoXxChapter/SIT210-730.git

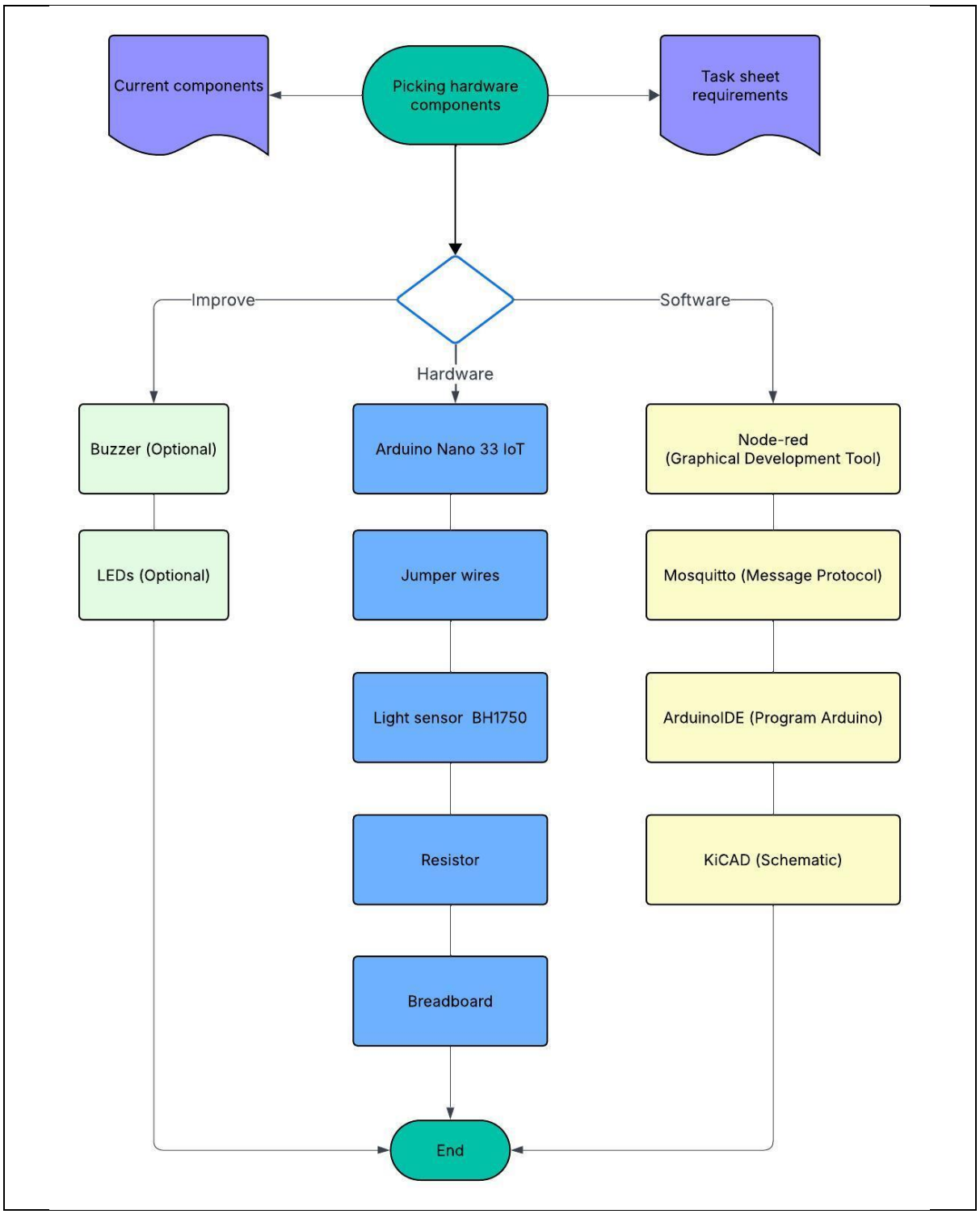

In this assignment I used few trigger/notification mechanisms. One is for the node-red (remote monitor), other is the physical observe (LEDs, buzzer). With both used the same mechanism is if/else. First with the node-red one.

```
var a = Number(msg.payload);
var state = 0;

if (a >= 100)
    state = 1;
else
    state = 0;
```

("email note" node – node-red)

With this one allow me to control the trigger only active when the light intensive got from the sensor got above or equal 100 lx. The reason I picked 100 as a mark due to it easy to mimic the test-run environment. But as in real-life situation, we don't want to bomber our customer (this case is Linda) with tsunami of notifications every time the intensity changing. So next trigger is when to "block" the repeated info unless the state itself changed.

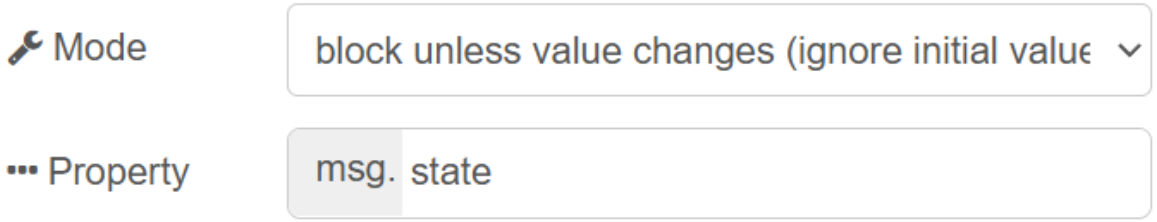

(The block node logic – avoid repeated desire info)

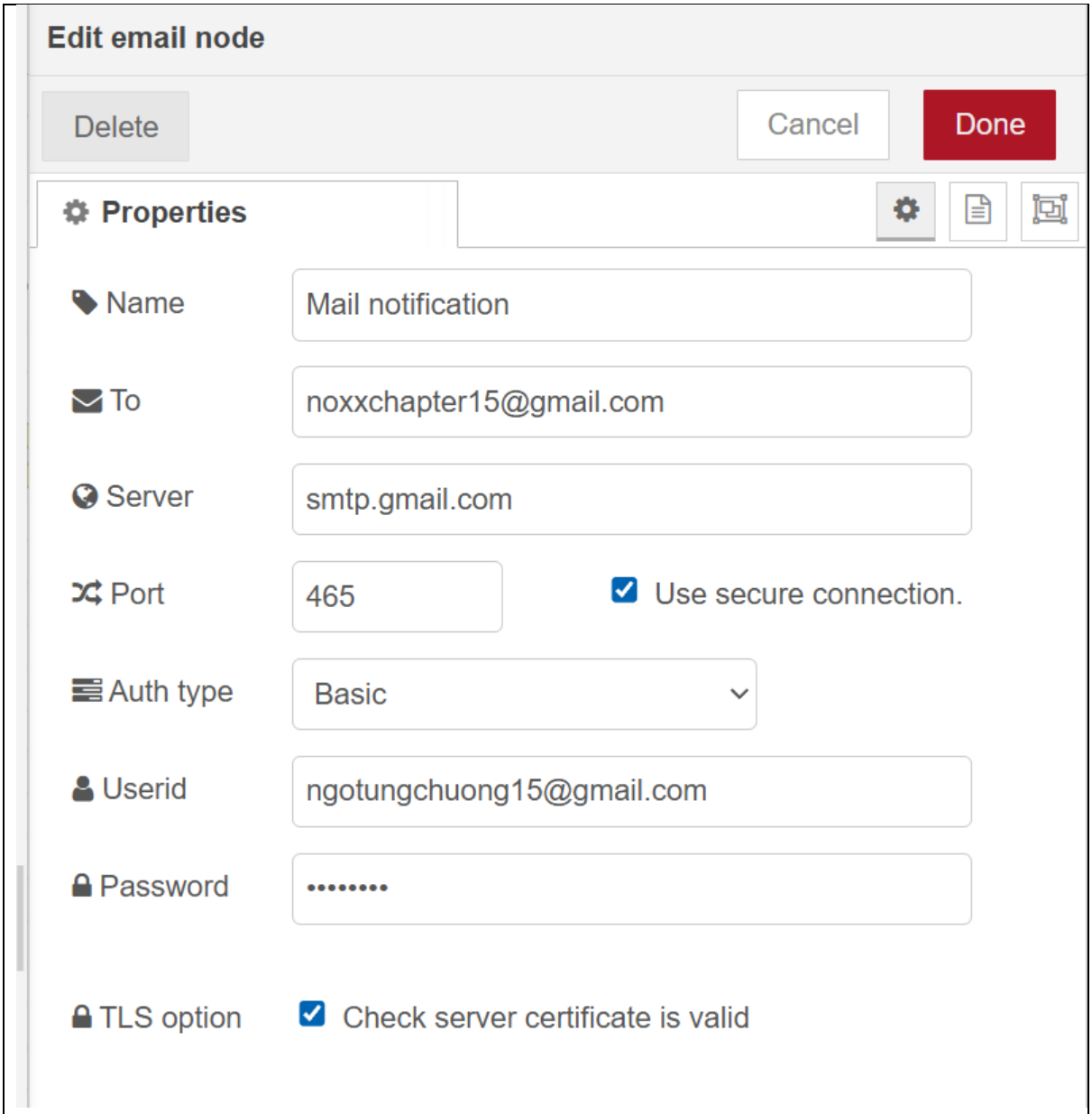

(email node – notification)

These are the two trigger I embedded in the node-red logic. Move to next one is the physical observe. With this it allows me to make a “case study” if it a real life, Linda just stand near the terrarium without her phone. How can she know?

```
if (lux < 50) {
  digitalWrite(green, HIGH);
  digitalWrite(yellow, LOW);
  digitalWrite(orange, LOW);
}
else if (lux >= 50 && lux < 100) {
  digitalWrite(yellow, HIGH);
  digitalWrite(green, LOW);
  digitalWrite(orange, LOW);
}
else if (lux >= 100) {
  digitalWrite(orange, HIGH);
  digitalWrite(yellow, LOW);
  digitalWrite(green, LOW);

  tone(buzzer, 500, 200);
}
```

(Trigger mechanism in ArduinoIDE ‘s code)

I created 3 differences stage of colour so that Linda could know when the best occasion is to move the terrarium out of the light. The green light as it serves as an “indicator” let user know if the sensor still active or not. Furthermore, give a signal that the current light is good to utilize. Move to the second stage, yellow. It gives out a signal this is the best time to start mobilizing the terrarium out of light. Because the light starts to get harsh. Last stage is orange, along with buzzer sound. In this stage if not give an “attraction” signal it would make the terrarium life environment a big stress. That why it noises and so eyes catching colour light.

In less than two paragraphs, describe how you would test the system you have built to see if it is working as intended?
The testing case was quite easily. First with the node-red. I run test if it receives the input signal from Arduino (COM7). With the signal established stable, I move to the next step. After successfully configured all the set-up. I start the run test. With the first scenario, is to run with the flashlight to quickly obtain the minor run result. The test runs were around the light sensor really trigger. Next is the real-life situation run, with this I started implied the email sending trigger. Which simulate the real application. After few run, I noted that the

sending mechanism was running repeatedly. Even though, I already received the desire notification, but it keeps sending. To resolve that, I add more condition to “block” certain messages when we know that info is already send not need to send it again. And that how I test it.
First real environment run: https://youtu.be/-_VCGkWtnOc?si=rdsJ0EXSI8rRWSNx
Reworked run: https://youtu.be/3ImtRhZ9vzI?si=c9Hy4OYHupkG2Iw

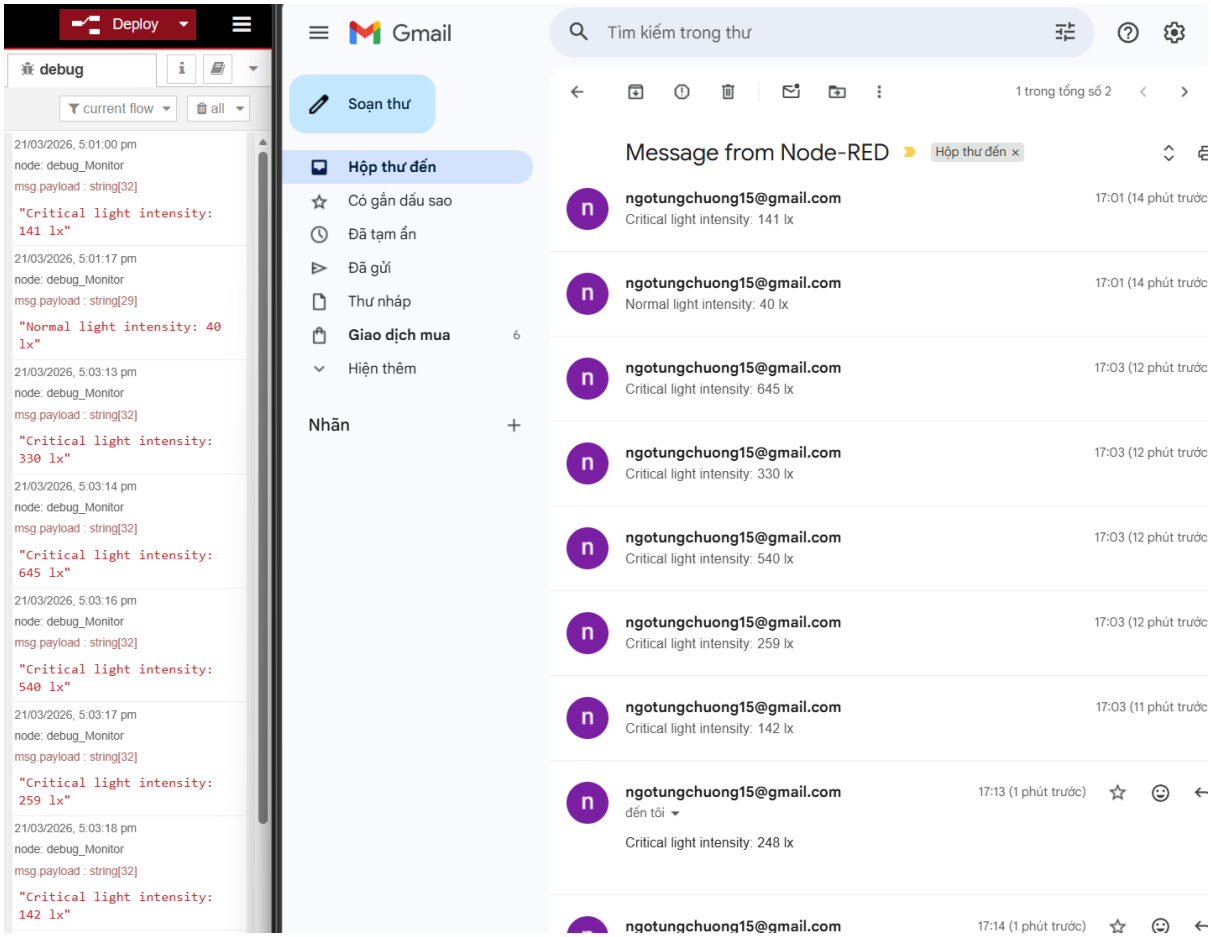

(received message from node-red itself - OLD)

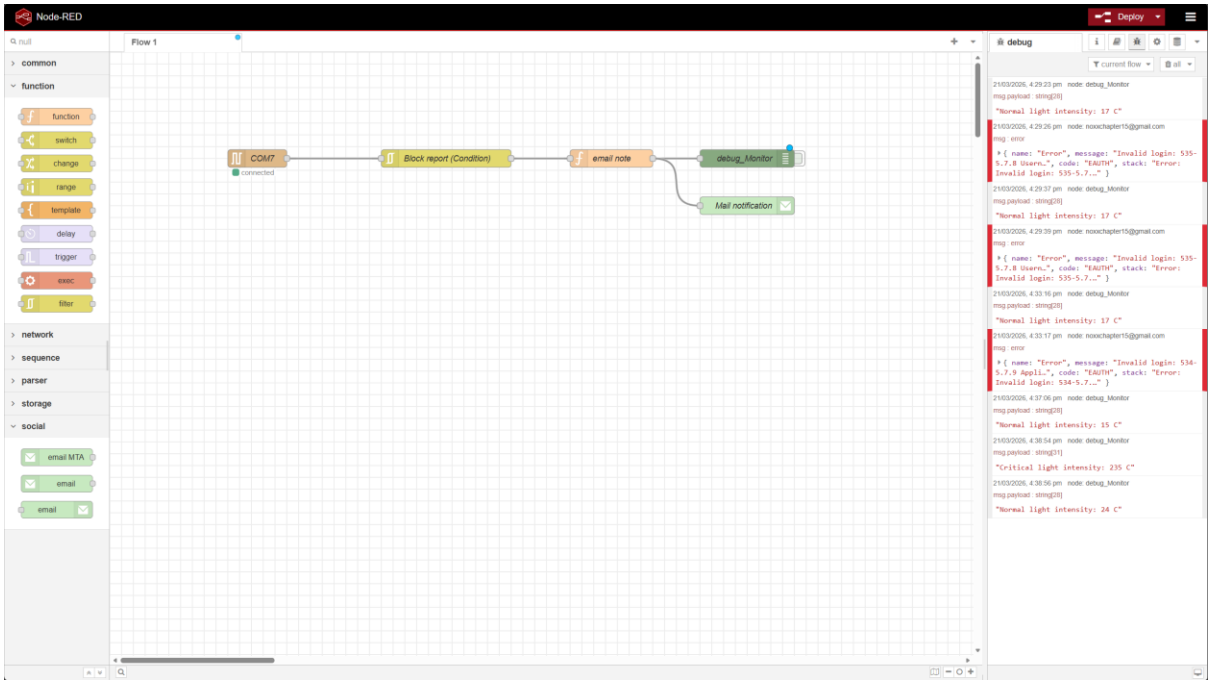

(node-red logic tree - OLD)

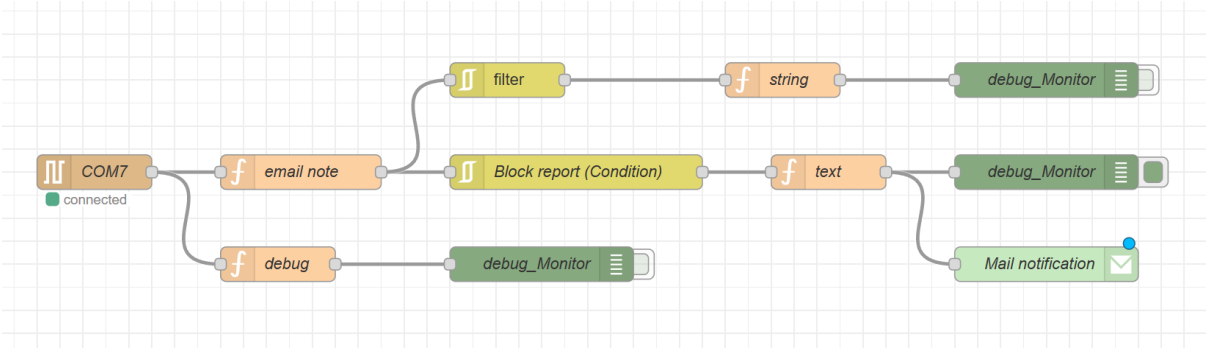

(node-red logic – NEW – this one got the proper filter way that allow only the critical light intensity notification to pop-up when reached. And only pop-up again when received info that the light was reduced to acceptable range again. Avoid flooding the receiver with repeatedly notifications, along with few debug monitors.)